BODY TANK WITH PUP WIRING DIAGRAM

UNITS BUILT SINCE SN 0049
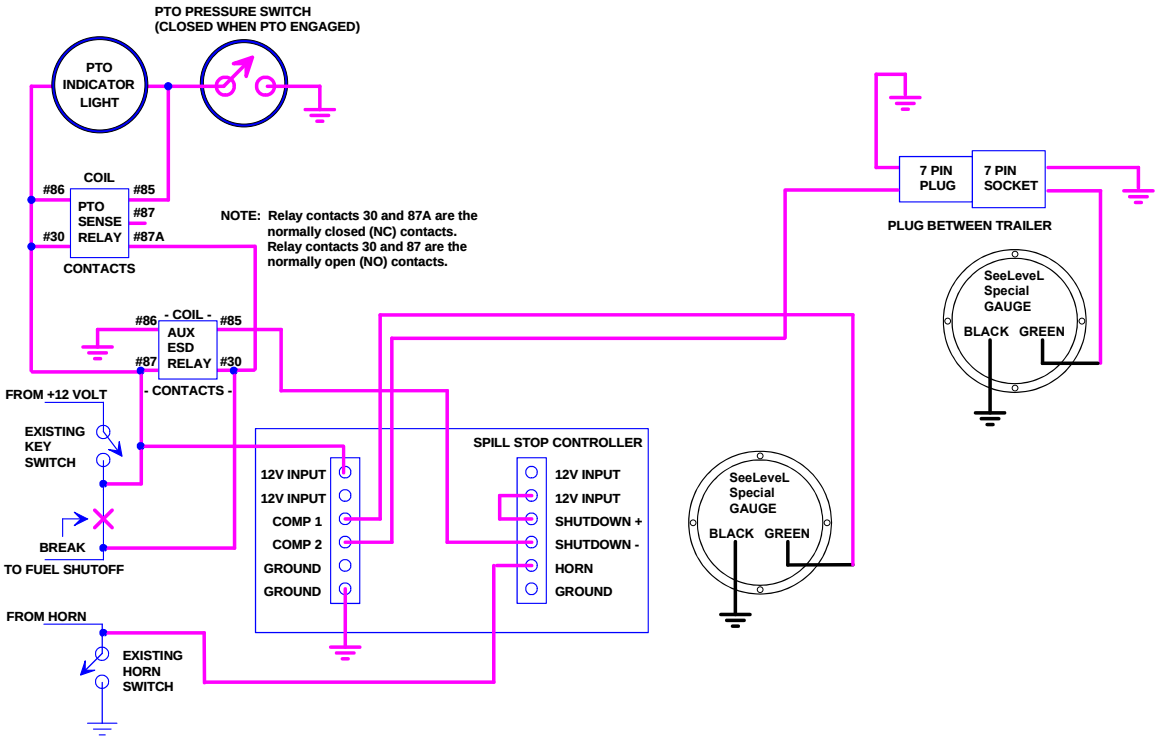
WITH PTO PRESSURE SWITCH APPLICATION