TRACTOR TRAILER WIRING DIAGRAM

TWO COMPARTMENT B-TRAIN
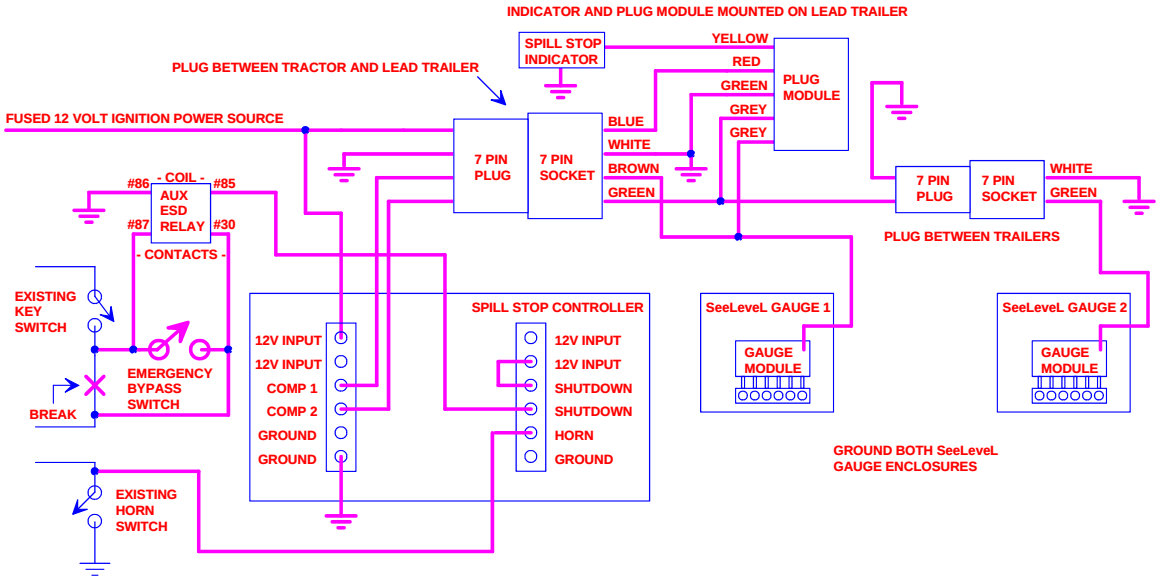
UNITS BUILT SINCE SN 0049