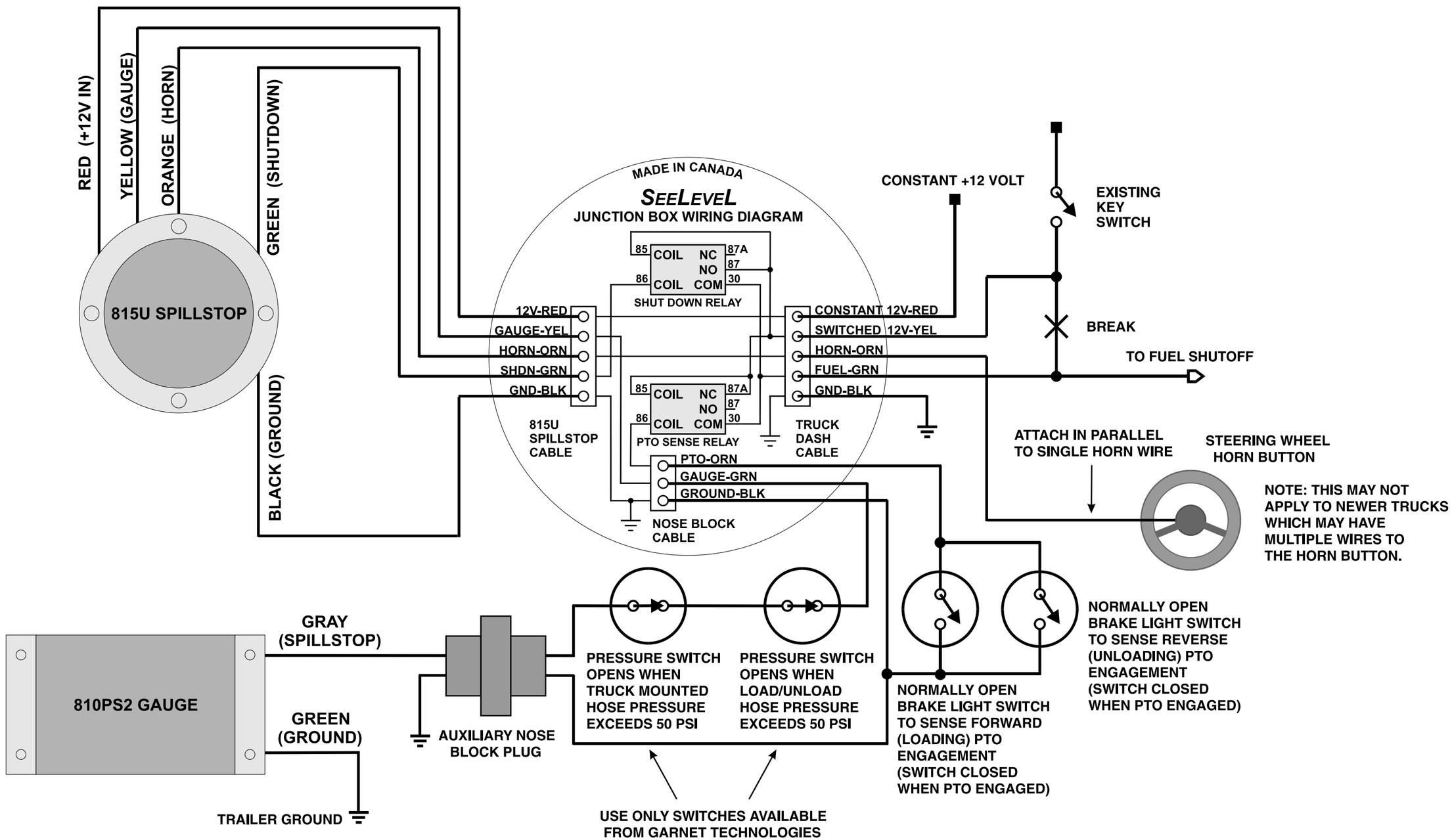815U WIRING DIAGRAM - ONE COMPARTMENT WITH 810PS2 GAUGE, 815U SPILLSTOP AND JUNCTION BOX
TRACTOR TRAILER APPLICATION (HOLLY)